Giant Pole - Installation

1

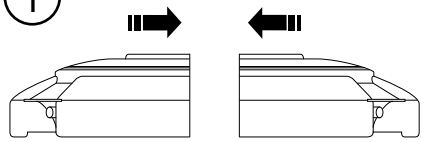

2

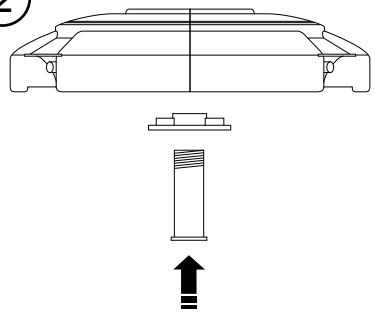

3

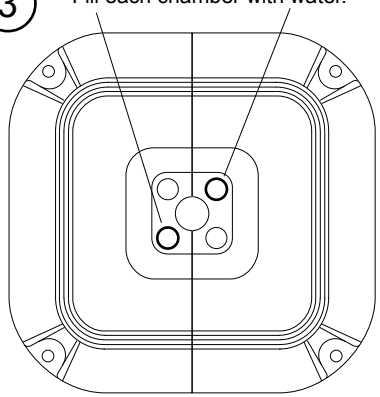

4

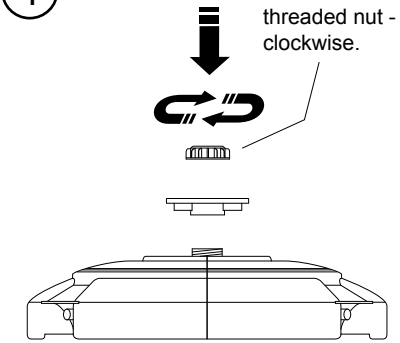

5

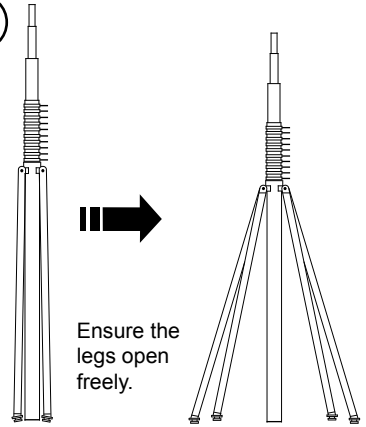

6

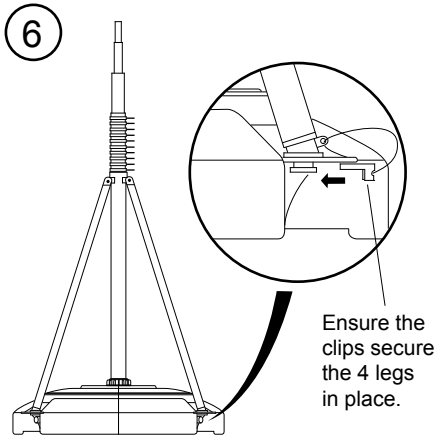

7

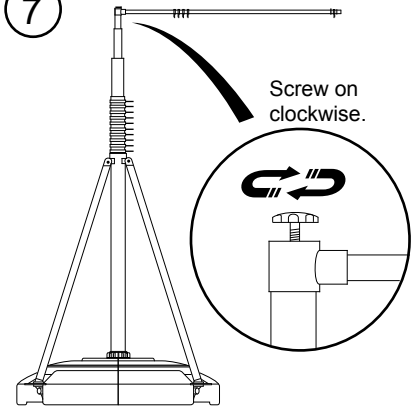

8

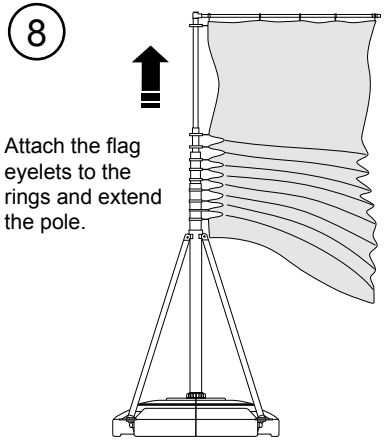

9

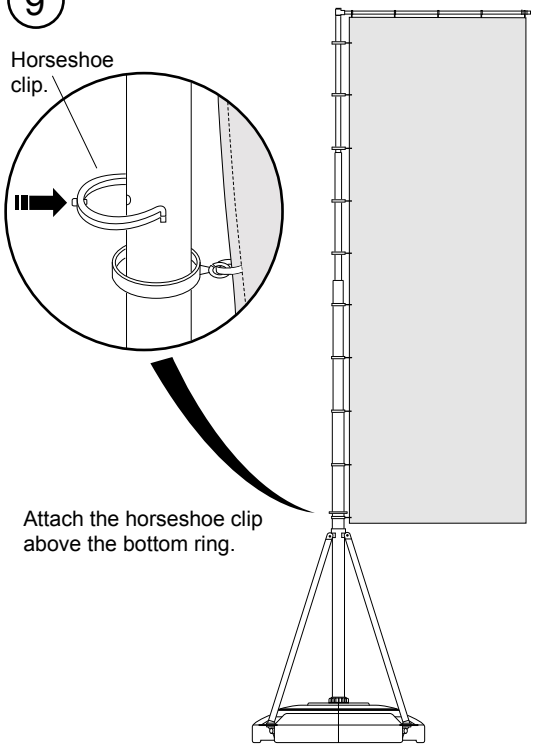

S-0141-02