FREELIGHT-PLUS Assembly & Installation

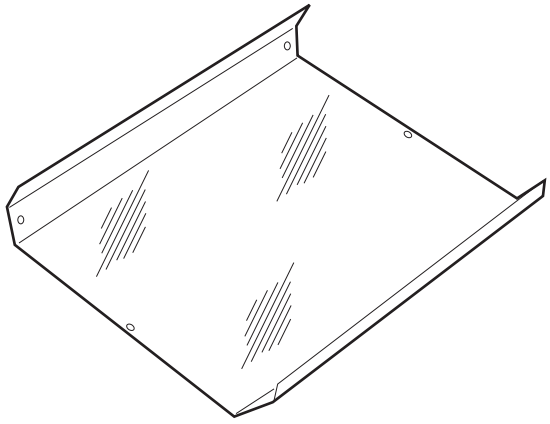

1. Lay the Lens onto a clean, flat surface.

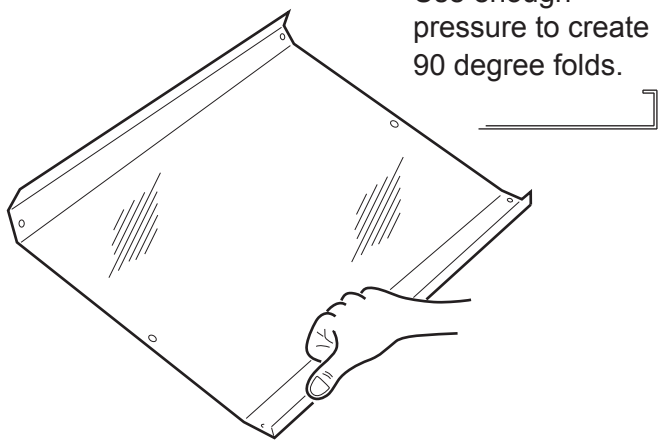

2. Fold all 4 creases & burnish down using your thumb as shown.

3. Fit the Lens into one End Cap.
The holes in the Lens locate into the clips in the End Cap.

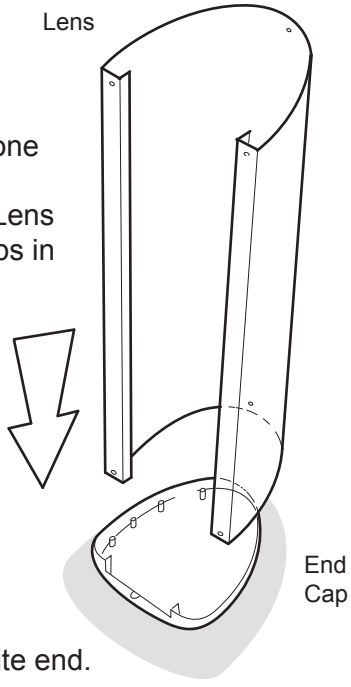

Repeat at the opposite end.

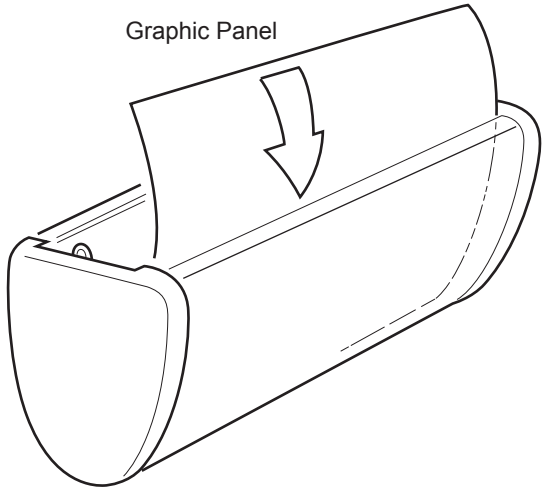

4. Insert the Graphic Panel into the Freelight.

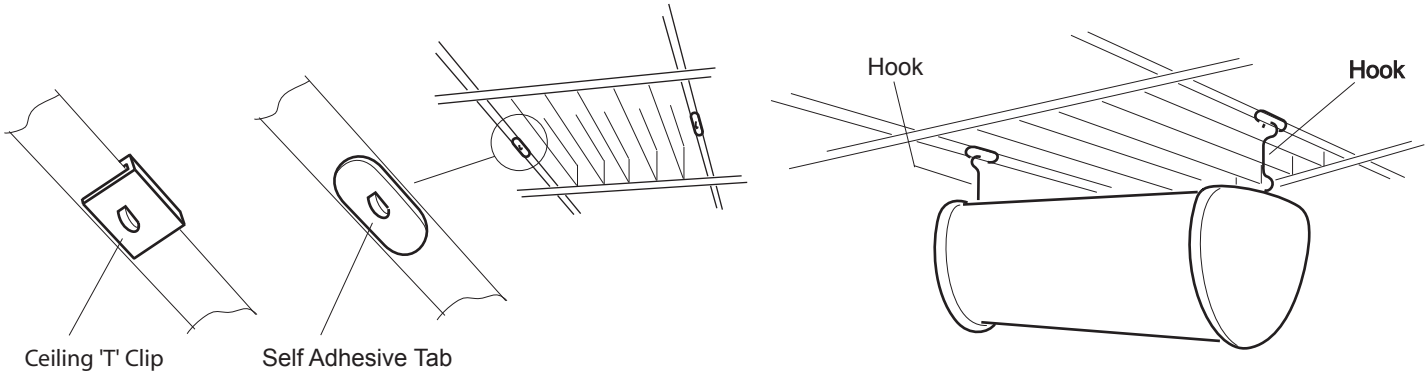

5. Position & fit the Freelight underneath a ceiling light using either the Ceiling 'T' Clips or the Self Adhesive Tabs with the Hooks provided.